SUMAKE *PNEUMATIC TOOLS*

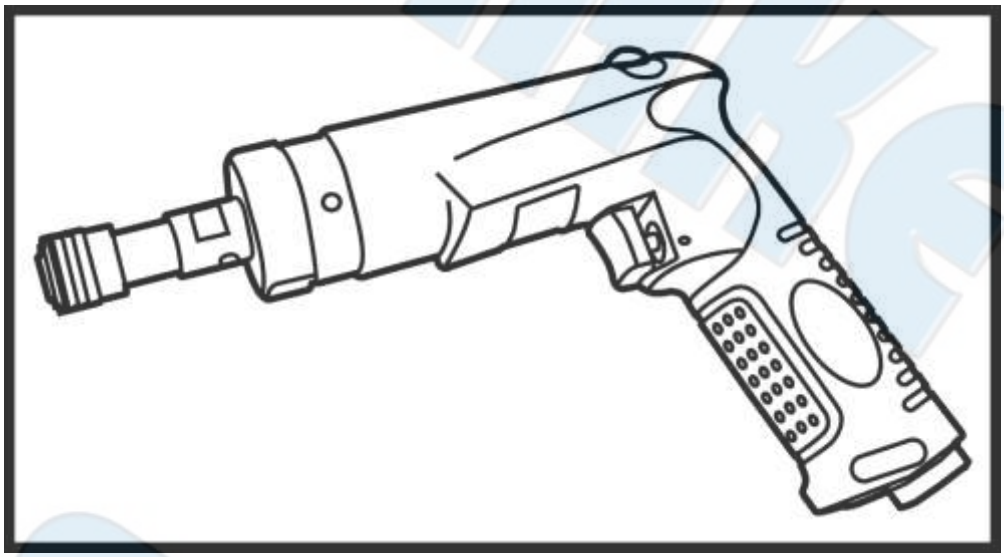

Ind. Air Stall Pistol Grip Screwdriver
ST-SD141

Specification:

Free Speed	2,800 r/min
Motor	0.6HP
Torque Range	60in-lbs(7Nm)
Air Consumption	14 CFM (396 L/min)
Overall Length	7-7/8” (200mm)
Air Inlet (PT)	1/4” (6.35 mm)
Air Hose (I.D.)	3/8” (10 mm)
Air Pressure	90 psi (6.3 bar)
Net Weight	1.98 lbs (0.9 kg)

Noise and Vibration:

Vibration EN ISO 28927-2	**Noise** EN ISO 15744	**Remark**
No Load: <2.5 m/s^2	Sound Pressure Level load: 84 dB(A)	Please always wear ear protector at environment noise level > 80 dB(A) due to risk of impaired hearing!
	Sound power level load: 95 dB(A)	
Uncertainty K= 1.5 m/s^2	Uncertainty K= 3dB	

SUMAKE INDUSTRIAL CO., LTD
4F,NO.351,Yangguang St.,Neihu District TAIPEI, TAIWAN, ZIP:114-91

EC DECLARATION OF CONFORMITY

We: **SUMAKE INDUSTRIAL CO., LTD.**

4F, No. 351, Yangguang St., Neihu District, Taipei City, Taiwan

declare in sole responsibility that the equipment

Equipment： **IND. AIR STALL PISTOL GRIP SCREWDRIVER**

Model/ Serial No.： **ST-SD141**

to which this declaration applies, complies with these normative documents:

- **Machinery Directive: 2006/42/EC**

and conforms to the following EN standard,

- **EN ISO 12100: 2010**
- **EN ISO 11148-6:2012**

Name and Signature/Position

Date and Place

2022/12/1

Mike Su – Managing Director

Taipei, Taiwan

ST-SD141-D-2308A-D5F

Foreword

Sumake is a manufacturer and exporter of air tools since established. We have devote all our efforts in improving quality and tools?life. As well as the noise and vibration of tools. Bring all of you working efficiences, profits, and enjoy using the tool is our principle.

Operator instruction

1. Main Applications

This assembly tool is the perfect one to which the work of setting aluminum windows, doors, slabs of automobiles, and other kinds of setting use.

2. Cautions for Use

2-1 Air pressure

Maximum performance is displayed at the proper sanding speed, obtainable at a gauge pressure of 6.2 bar. Range-wise, this is an air pressure from 5 to 7 bar (70 to 100 psi)

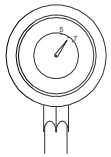

2-2 Air line

Use a 3/4?air hose between the compressor and the tool . Compressed air is cooled and its water content separated, as soon as the air leaves the compressor. A portion of the water content, however, is condensed in the piping, and can enter the tool mechanism, and may cause trouble. So, install an air filter and on oiler between the compressor and the tool. Use a 3 HP or larger compressor for each sander.

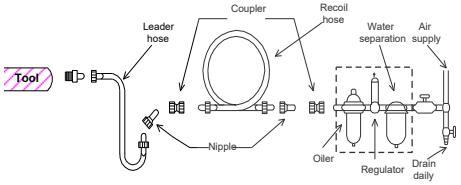

2-3 Air hose

Clean the hose with a blast of compressed air before connecting the hose to air tool. This will prevent both moisture and dust within the hose from entering the tool and causing possible rust or malfunction. To compensate for unusually long hose (over 25 ft), the line pressure should be increased accordingly.

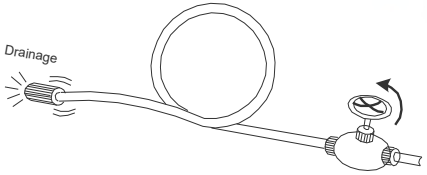

2-4 Inserted tools

Use only the socket or adapter which are in good condition for use. The intended socket and adapter for this air tool could are stated as quare Drive?on the specification list.

2-5 The approved eye protector, ear-muff, mouth-muffle, and gloves shall be worn when operate this tool.

2-6 The working place shall be ventilative.

2-7 Release the on-off device in the case of energy supply failure.

3. Operation Method

3.1 On-off device

The on-off device is on the inner or outer contour of the grip. It is a old-to-run?type. This tool stops rotation within few sec, after releasing the lever. For the sake of safety, place it on a level plate or on hanger after it completely stops.

3.2 Torque Adjuster

You can adjust the torque by rotating the knob which indicated by 1 to 6. ??indicates the smallest torque output and ??indicts the largest torque output.

3.3 Rotating Direction

One shall make sure the direction of rotation before actuate this tool. The ?indicts foreword and the ?indicts reverse. Forward is defined as clockwise direction seen from the operator position.

4. Maintenance

4-1 Lubrication

Before connecting the hose , apply 4 or 5 drops of #60 spindle oil at the air inlet. Use of a thicker oil can lead to reduced performance or malfunction. If a thicker oil is used by accident, wash it away immediately. Also, every 3 or 4 hours of operation, oiling is necessary.

4-2 Storage

Avoid storing the tool in a location subject to high humidity. If the tool is left as it is used , the residual moisture inside the tool can cause rust. Before storing and after operation, oil the tool at the air inlet with spindle oil and run it for a short time.

4-3 Disposal

If the tool is too seriously damaged to be used anymore, drop it in a resource recycling can. Never drop it into fire.

4-4 Ordering service Parts

For further operational and handling information or for replacement of parts and components, contact the sale agent from whom you purchased the tool or the service division of our company.

* In ordering parts and components, give each part number, name and quantity.

Warning

1. The power toll shall not be used in potentially explosive atmospheres.

2. Disconnect the air hose before changing or adjusting any inserted tools.

3. Prevent long hair or loose clothing from drawing in while operate this tool.

4. Keep your body in well balanced position and always wear gloves to reduce the risk of crushing caused by torque between handle and workpiece.

5. Unexpected direction of rotating could cause a hazardous situation.

6. Slip/Trip/Fall is a major reason of serious injury or death. Beware of excess hose left on the walking or work surface.

7. Wearing eye/face protector could reduce the danger to person from high speed splinters being emitted from this tool in the case of inserted tool failure or emitted from the workpiece.

8. Wearing mouth-muff could avoid inhaling dus or handling debris from work process that can be harmful to your health.

9. Excessive high air pressure and too much free rotation may speed the wear of this tool and might cause danger situation.

ST-SD141

IND. AIR STALL PISTOL GRIP SCREWDRIVER

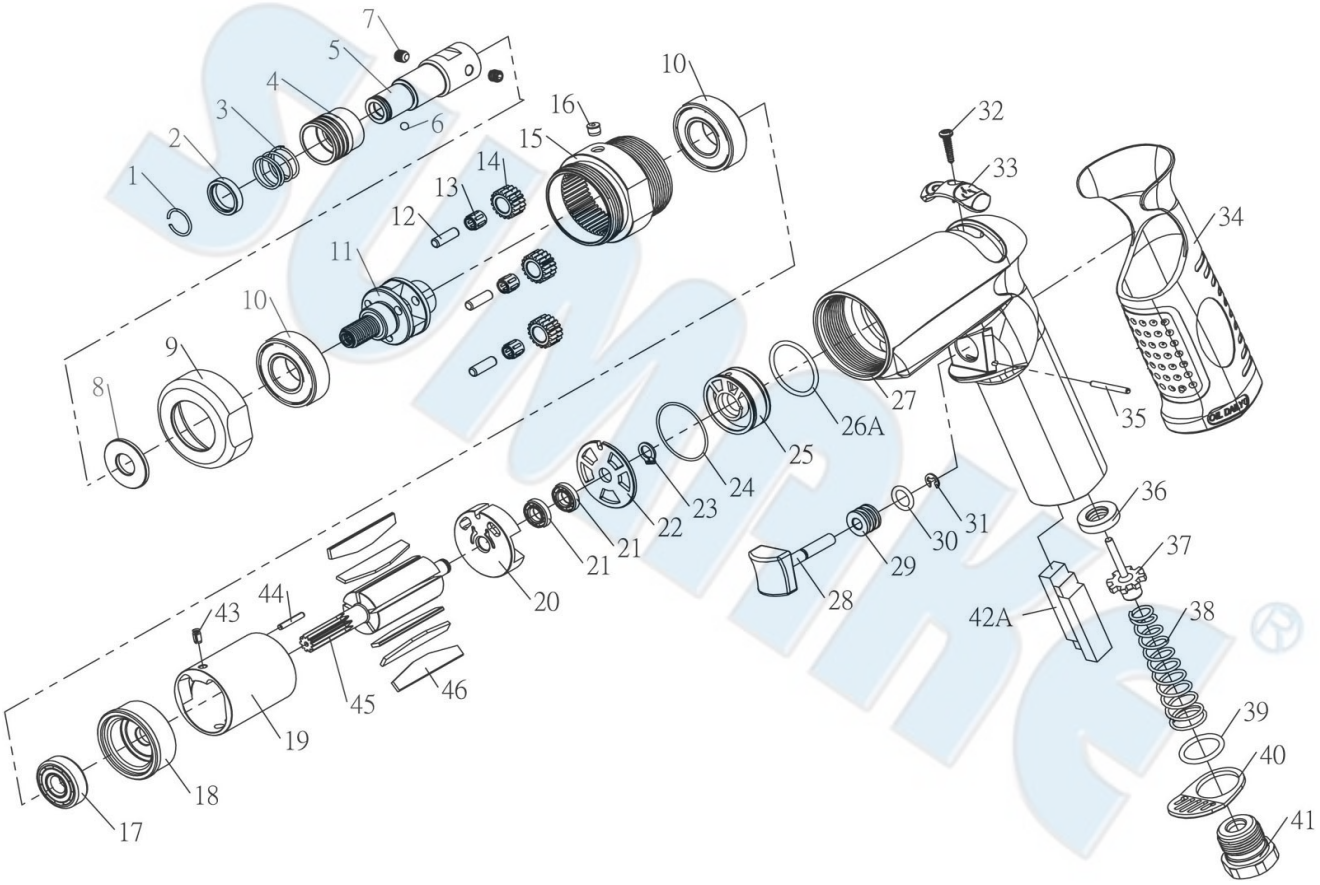

PARTS LIST

No.	Parts No.	Description	Q'ty
1	SD142-01	Retainer Ring	1
2	SD142-02	Washer	1
3	SD142-03	Spring	1
4	SD142-04	Ball Retainer	1
5	SD142-05	Spindle	1
6	SD142-06	Ball	1
7	SD142-07	Set Screw	2
8	SD142-08	Washer	1
9	SD142-09	Gear Case Cap	1
10	SD142-10	Ball Bearing	2
11	SD141-11	Gear Carrier	1
12	SD142-12	Pin	3
13	SD142-13	Needle Bearing	3
14	SD142-14	Planet Gear	3
15	SD142-15	Gear Case	1
16	SD142-16	Grease Fitting	1
17	SD142-17	Ball Bearing	1
18	SD142-18	Front End Plate	1
19	SD142-19	Cylinder	3
20	M5213R-20	Rear End Plate	1
21	M5213R-21	Ball Bearing	2
22	M5213R-22	Reversing Plate	1
23	M5213R-23	Snap Ring	1
24	M5213R-24	O-Ring (ID22x1)	1

No.	Parts No.	Description	Q'ty
25	M5213R-25	Reverseing Manifold	1
26A	M5213R-26A	O-Ring	1
27	SD142-27	Housing	1
28	M5213R-28	Trigger	1
29	M5213R-29	Trigger Sleeve	1
30	M5213R-30	O-Ring	1
31	M5213R-31	Retaining Ring	1
32	M5213R-32	Taping Screw	1
33	M5213R-33	Reverseing Shuttle	1
34	M5213R-34	Housing Cover	1
35	M5213R-35	Spring Pin	1
36	M5213R-36	Washer	1
37	M5213R-37	Pin Valve Rod	1
38	M5213R-38	Trigger Spring	1
39	M5213R-39	O-Ring	1
40	M5213R-40	Exhaust Cap	1
41	M5213R-41	Air Inlet	1
42A	M5213R-42A	Silencer Pad	3
43	SD142-43	Spring Pin	1
44	SD142-44	Spring Pin	1
45	SD142-45	Rotor	1
46	SD142-46	Rotor Blade	5
SD141-RK		Spindle Kit [Incl. 1, 2, 3, 4, 5, 6, 7(2), 8, 10(2), 11]	

SUMAKE®

MAKE JOBS BETTER THAN EVER

SCREWDRIVER

Original instructions

SUMAKE Industrial Co. Ltd.

Professional & Industrial

Read all these safety instructions before operating this product and save these instructions.

The tool has been manufactured in conformity with the instruction of EU machine directive. The EU mark will be considered void in the event of inexpert repairs, the use of non-original parts and in case of non-observance of the safety instructions in the user's manual.

Possible direct or indirect consequential damages are not the responsibility of SUMAKE Industrial co., Ltd.

General safety rules:

1. Watch the tool at all times when in use.
2. People under the influence of alcohol or drugs are not allowed to use, repair or maintain the tool.
3. Keep unqualified persons, children, etc. away from the tool.
4. Keep work area clean and with sufficient daylight or artificial lighting. The work area on which the machine is used must be cleaned up. Disorder is a potential cause of accidents.
5. Danger of explosion. Never use oxygen and combustible gas as an air supply for the tool which may be ignited by spark and cause fire or explosion.
6. Never use gasoline or other flammable liquids to clean the tool.
7. Do not use air tools in potentially explosive atmospheres such as in the presence of flammable liquids, cleaning solvents, fluid energy or stored gases.
8. Do not expose air tools to rain. Do not use air tools in damp or wet locations.
9. When a fault or failure is detected, the tool must immediately be disconnected from the air supply and returned for repair.
10. When not in use, keep tools in a dry place, either locked up or in a high place, out of the reach of children.
11. Do not force small air tools to do the job of a heavy –duty task. Do not use air tool for purpose of which was not intended.
12. Wear suitable ear protection at environment noise level >80dB(A) and safety spectacles when using the tool. Always wear approved safety goggles if work in dusty. This also applies to other persons in the nearby vicinity.
13. Do not wear loose clothing or jewelry. They can be caught in moving parts. Rubber gloves and non-skid foot wear are recommended when working outdoors. Wear protective hair covering to contain long hair.
14. Keep proper footing and balance at all times.
15. Use clamps or a vice to hold work-piece. It is safer than using your hand and free both hands to operate the air tool.
16. When not use, before performing service or changing accessories, please disconnect tool from air compressor.
17. Do not carry plugged in air tool with your finger on the switch trigger. Be sure switch is in the "OFF" position when connecting to air supply.
18. Watch what you are doing. Use common sense, even unsafe situation or unbalanced positions, particularly when you are tired.
19. Air powered tools can vibrate in use. Vibration, repetitive motions or uncomfortable positions may be harmful to your hands or arms. Stop using any tool if discomfort, tingling feeling or pain occurs. Seek medical advice before resuming use.
20. For multiple hazards, read and understand the safety instructions before installing, operating, repairing, maintaining, changing accessories on, or working near the assembly power tool for threaded fasteners. Failure to do so can result in serious bodily injury.
21. Only qualified and trained operators should install, adjust or use the assembly power tool for threaded fasteners.
22. Do not modify this assembly power tool for threaded fasteners. Modifications can reduce the effectiveness of safety measures and increase the risks to the operator.
23. Do not discard the safety instructions; give them to the operator.
24. Tools shall be inspected periodically to verify that the ratings and markings required by this part of EN ISO 11148 are legibly marked on the tool. The employer/user shall contact the manufacturer to obtain replacement marking labels when necessary.

Safety precautions for projectile hazards

1. Failure of the workpiece, of accessories or even of the inserted tool itself can generate high-velocity projectiles.
2. Always wear impact-resistant eye protection during the operation of the assembly power tool for threaded fasteners. The grade of protection required should be assessed for each use.
3. Ensure that the workpiece is securely fixed.

Safety precautions for entanglement hazards

1. Entanglement hazards can result in choking, scalping and/or lacerations if loose clothing, personal jewellery, neckware, hair or gloves are not kept away from the tool and accessories.
2. Gloves can become entangled with the rotating drive, causing severed or broken fingers.
3. Rotating drive sockets and drive extensions can easily entangle rubber-coated or metal-reinforced gloves.
4. Do not wear loose-fitting gloves or gloves with cut or frayed fingers.
5. Never hold the drive, socket or drive extension.
6. Keep hands away from rotating drives.

Safety precautions for operating hazards

1. The use of the tool can expose the operator's hands to hazards including crushing, impacts, cuts and abrasions and heat. Wear suitable gloves to protect hands.
2. Operators and maintenance personnel shall be physically able to handle the bulk, weight and power of the tool.
3. Hold the tool correctly; be ready to counteract normal or sudden movements and have both hands available.
4. Maintain a balanced body position and secure footing.
5. Release the start-and-stop device in the case of an interruption of the energy supply.
6. Use only lubricants recommended by the manufacturer.
7. Do not use in confined spaces and beware of crushing hands between tool and workpiece, especially when unscrewing.

Safety precautions for repetitive motions hazards

1. When using a power tool, the operator can experience discomfort in the hands, arms, shoulders, neck, or other parts of the body.

2. While using an assembly power tool for threaded fasteners, the operator should adopt a comfortable posture whilst maintaining secure footing and avoiding awkward or off-balanced postures. The operator should change posture during extended tasks, which can help avoid discomfort and fatigue.
3. If the operator experiences symptoms such as persistent or recurring discomfort, pain, throbbing, aching, tingling, numbness, burning sensations or stiffness, these warning signs should not be ignored. The operator should tell the employer and consult a qualified health professional.

Safety precautions for accessory hazards
1. Disconnect the assembly power tool for threaded fasteners from the energy supply before changing the inserted tool or accessory.
2. Use only sizes and types of accessories and consumables that are recommended by the assembly power tool for threaded fasteners manufacturer.

Safety precautions for workplace hazards
1. Slips, trips and falls are major causes of workplace injury. Be aware of slippery surfaces caused by the use of the tool and also of trip hazards caused by the air line or hydraulic hose.
2. Proceed with care in unfamiliar surroundings. Hidden hazards, such as electricity or other utility lines, can exist.
3. The assembly power tool for threaded fasteners is not intended for use in potentially explosive atmospheres and is not insulated against coming into contact with electric power.
4. Make sure there are no electrical cables, gas pipes, etc., that can cause a hazard if damaged by use of the tool.

Safety precautions for dust and fume hazards
1. Dust and fumes generated when using assembly power tools for threaded fasteners can cause ill health (for example, cancer, birth defects, asthma and/or dermatitis); risk assessment and implementation of appropriate controls for these hazards are essential.
2. Risk assessment should include dust created by the use of the tool and the potential for disturbing existing dust.
3. Direct the exhaust so as to minimize disturbance of dust in a dust-filled environment.
4. Where dust or fumes are created, the priority shall be to control them at the point of emission.
5. All integral features or accessories for the collection, extraction or suppression of airborne dust or fumes should be correctly used and maintained in accordance with the manufacturer's instructions.
6. Use respiratory protection in accordance with employer's instructions and as required by occupational health and safety regulations.

Safety precautions for noise hazards
1. Unprotected exposure to high noise levels can cause permanent, disabling, hearing loss and other problems, such as tinnitus (ringing, buzzing, whistling or humming in the ears).
2. Risk assessment and implementation of appropriate controls for these hazards are essential.
3. Appropriate controls to reduce the risk may include actions such as damping materials to prevent workpieces from “ringing”.
4. Use hearing protection in accordance with employer's instructions and as required by occupational health and safety regulations.
5. Operate and maintain the assembly power tool for threaded fasteners as recommended in the instruction handbook, to prevent an unnecessary increase in noise levels.
6. If the assembly power tool for threaded fasteners has a silencer, always ensure it is in place and in good working order when the assembly power tool for threaded fasteners is operating.
7. Select, maintain and replace the consumable/inserted tool as recommended in the instruction handbook, to prevent an unnecessary increase in noise.

Safety precautions for vibration hazards
1. Exposure to vibration can cause disabling damage to the nerves and blood supply of the hands and arms.
2. Wear warm clothing when working in cold conditions and keep your hands warm and dry.
3. If you experience numbness, tingling, pain or whitening of the skin in your fingers or hands, stop using the assembly power tool for threaded fasteners, tell your employer and consult a physician.
4. Operate and maintain the assembly power tool for threaded fasteners as recommended in the instruction handbook, to prevent an unnecessary increase in vibration levels.
5. Select, maintain and replace the consumable/inserted tool as recommended in the instruction handbook, to prevent an unnecessary increase in vibration levels.
6. Sleeve fittings should be used where practicable.
7. Support the weight of the tool in a stand, tensioner or balancer, if possible.
8. Hold the tool with a light but safe grip, taking account of the required hand reaction forces, because the risk from vibration is generally greater when the grip force is higher.

Additional safety instructions for pneumatic power tools
1. Always shut off air supply, drain hose of air pressure and disconnect tool from air supply when not in use, before changing accessories or when making repairs.
2. Never direct air at yourself or anyone else.
3. Whipping hoses can cause severe injury. Always check for damaged or loose hoses and fittings.
4. Cold air shall be directed away from the hands.
5. Whenever universal twist couplings (claw couplings) are used, lock pins shall be installed and whipcheck safety cables shall be used to safeguard against possible hose-to-tool and hose-and-hose connection failure.
6. Do not exceed the maximum air pressure stated on the tool.
7. For torque-control and continuous-rotation tools, the air pressure has a safety critical effect on performance. Therefore, requirements for length and diameter of the hose shall be specified.
8. Never carry an air tool by the hose.

General preparation and connection:

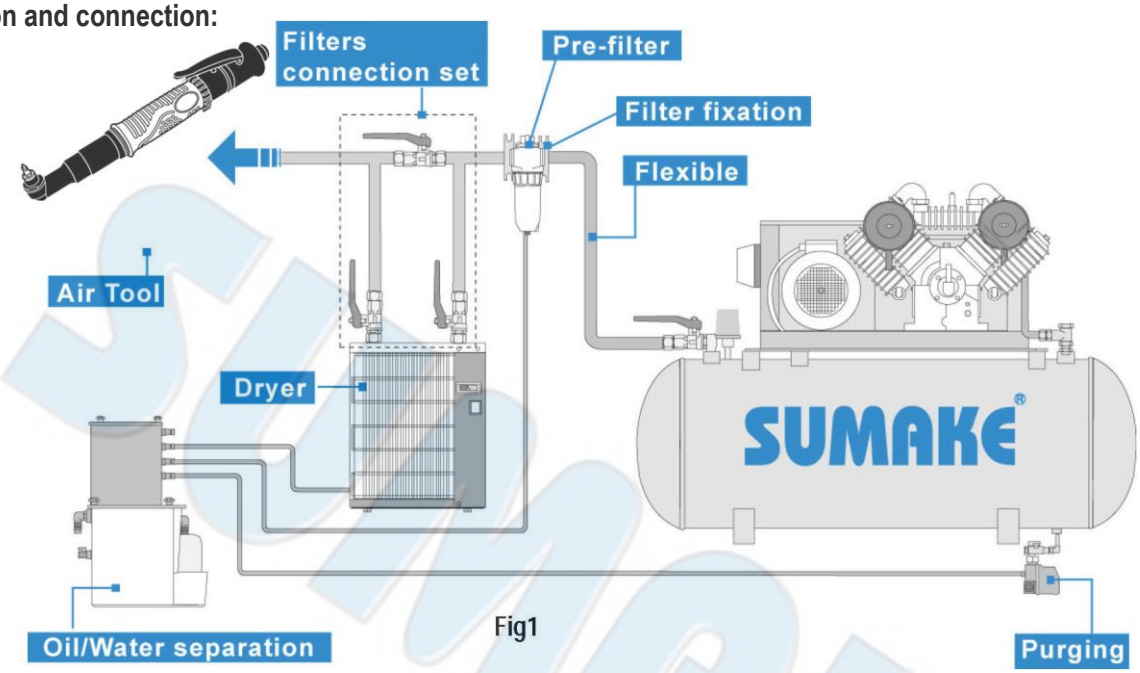

Fig1

1. When using brand-new air hose or air pipe. Blow and clean the inside of air hose or pipe before installation.
2. Keep inside of air hose or air pipe clean to prevent airdrop problem caused by the lots of drain and dust accumulated and possibly make the inside diameter smaller in the long use.
3. Before connecting the air hose, apply 4 to 5 drops of SAE(#40-#60) spindle oil at the air inlet. Also, every 3 to 4 hours of operation, oiling is necessary. Twist Teflon thread tape to ensure a proper seal air inlet. Then tighten the air coupler into air tool.
4. The supplied compressed air must be clean and dry, with the appropriate oil mist. Use an air treatment unit; filter, regulator and lubricator.
5. Please refer Fig.1 illustration shows the correct mode of connection to the air supply system which will increase the efficiency and useful life of the tool.
6. The quick connect coupling and hose must have sufficient air flow capacity. We recommend an air hose with a diameter of 5mm for small body, 8mm for big body.
7. To ensure a good performance. The operation pressure at the compressed air inlet should not exceed 6.3 bar (90psi) (unless indicated otherwise). Higher operating pressures may cause damaged or excessive wear. Operating pressures below 5.3bar may cause pressure or power loss.

Risk of injury

1. Compressed air can inflict serious injuries. Therefore never point the air hose at another person or yourself.
2. Shut – off the air supply and disconnect the tool in case:
   - You want to change or replace accessories.
   - You want to clean, repair or maintain the tool.
   - The tool is not going to use for some times.
3. Check compressed air hose before use. If it is damaged, broken, torn, or deformed, the hose is not to be connected to the tool.
4. Always check the pneumatic couplings before using the tool. If they show signs of damage, fracture, cracking or excessive corrosion, the respective tool or the air hose is not to be used.
5. Use only qualified adapters and connectors, In case of wear they are to be replaced immediately.
6. Only use air pipes that are fit for the use at maximum pressure.

Maintenance instruction:

1. Dry the filter (fig1) and the air inlet of the tool.
2. Lubricate the quick connect coupling to prevent blocking.
3. Air tool require lubrication throughout the life of the tool. The air motor and bearing uses compressed air to start the tool. The moisture in compressed air will rust the air motor; you must lubricate the motor daily.
4. Avoid storing the tool in a location subject to high humidity. If the tool is left as it is used, the residual moisture inside the tool can cause rust.
5. Before storage, lubricate tool and run it for a few seconds.
6. Regular inspection of spindles, threads, and clamping devices in respect of wear and tolerances for location of abrasive products.
7. If the tool is too seriously damage to be used anymore, recycle raw material instead of disposing as waste. The machine, accessories and packaging should be sorted for environmental-friendly recycling. Check with your local authority or retailer for recycling advice.